Approx. weight

Material	kg	lb
Carbon steel	95.1	210
Stainless steel 304 and 304L	95.7	211
Stainless steel 316 and 316L	96.9	214

Densities 7.85, 7.9 and 8.0 g/cm3.
Calculated from the dimensions as the standard gives them, with no allowance for tolerance.

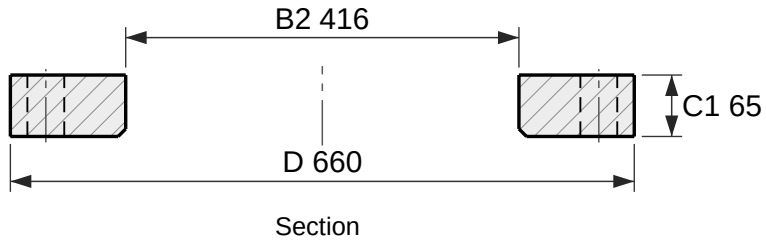

Section

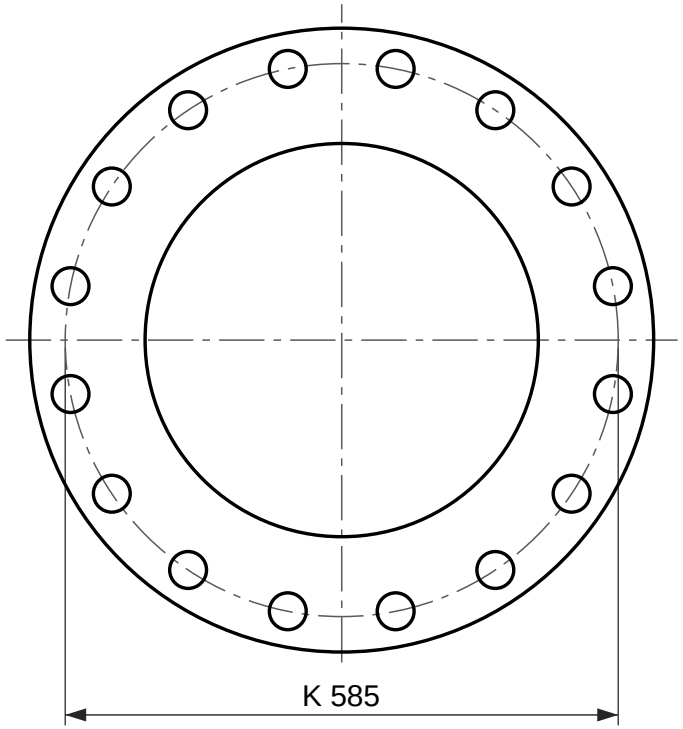

16 holes Ø39

Face view

Loose plate flange, EN 1092-1 type 02, PN 40

DN 400, for a collar type 32, 33, 35, 36 or 37

Designation: Flange EN 1092-1/02/DN 400/PN 40
Dimensions per EN 1092-1:2018, Table 15 (PN 40) and Table 8 (facing); tolerances per EN 1092-1.
A loose plate flange turns on a collar, EN 1092-1 type 32, 33, 35, 36 or 37, which is welded to the pipe and is not drawn here. The collar carries the joint face.
Reference drawing. The purchase order and EN 1092-1 govern.
Generated at rajendradatacenter.com/flanges/en-1092-1/

Dimension	mm	in
D Outside diameter	660	25.98
C1 Flange thickness	65	2.56
B2 Bore	416	16.38
E Chamfer at the bore	8	0.31
K Bolt circle diameter	585	23.03
L Bolt holes, 16 off	39	1.54

16 bolts M36; holes 39 mm (1.54 in)

RAJENDRA INDUSTRIAL CORPORATION
rajendradatacenter.com
Drawing RIC-EN1092-02-PN40-DN400
Scale 1:8 on A4
Units: mm (inches)
Date 2026-11-22
Quote: rajendradatacenter.com/rfq/
sales@rajendradatacenter.com
+91 74338 71355