Approx. weight

Material	kg	lb
Carbon steel	43.6	96.2
Stainless steel 304 and 304L	43.9	96.8
Stainless steel 316 and 316L	44.5	98.0

Densities 7.85, 7.9 and 8.0 g/cm3.
Calculated from the dimensions as the standard gives them, with no allowance for tolerance.

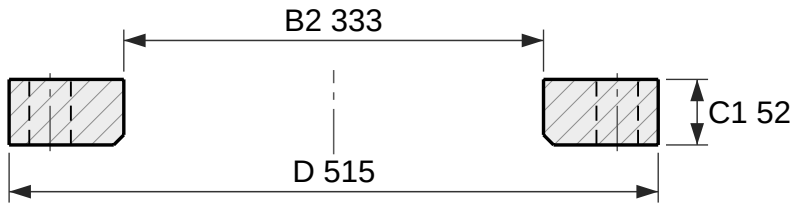

Section

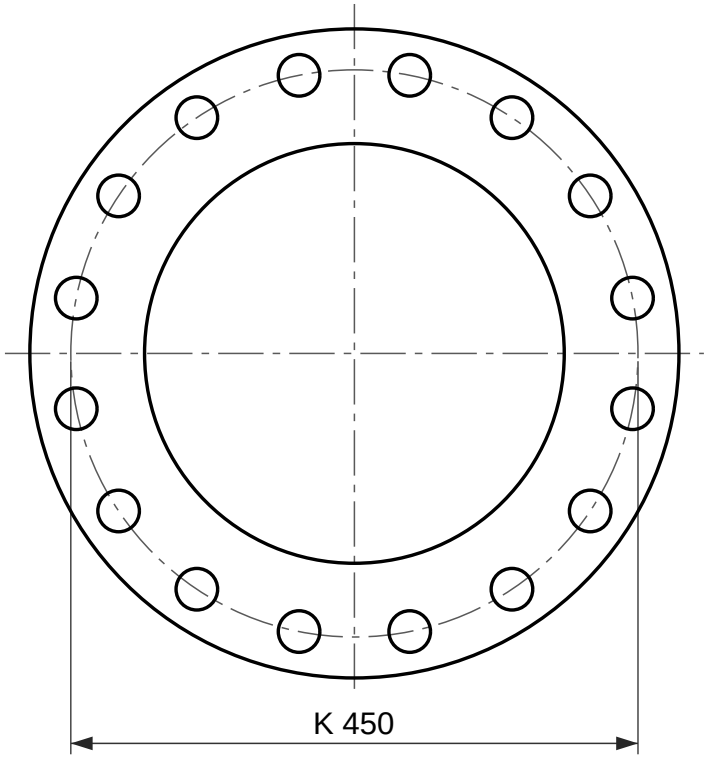

16 holes Ø33

Face view

Loose plate flange, EN 1092-1 type 02, PN 40

DN 300, for a collar type 32, 33, 35, 36 or 37

Designation: Flange EN 1092-1/02/DN 300/PN 40
Dimensions per EN 1092-1:2018, Table 15 (PN 40) and Table 8 (facing); tolerances per EN 1092-1.
A loose plate flange turns on a collar, EN 1092-1 type 32, 33, 35, 36 or 37, which is welded to the pipe and is not drawn here. The collar carries the joint face.
Reference drawing. The purchase order and EN 1092-1 govern.
Generated at rajendradatacenter.com/flanges/en-1092-1/

Dimension	mm	in
D Outside diameter	515	20.28
C1 Flange thickness	52	2.05
B2 Bore	333	13.11
E Chamfer at the bore	8	0.31
K Bolt circle diameter	450	17.72
L Bolt holes, 16 off	33	1.30

16 bolts M30; holes 33 mm (1.30 in)

RAJENDRA INDUSTRIAL CORPORATION
rajendradatacenter.com
Drawing RIC-EN1092-02-PN40-DN300
Scale 1:6 on A4
Units: mm (inches)
Date 2026-11-22
Quote: rajendradatacenter.com/rfq/
sales@rajendradatacenter.com
+91 74338 71355