Approx. weight

Material	kg	lb
Carbon steel	17.4	38.3
Stainless steel 304 and 304L	17.5	38.6
Stainless steel 316 and 316L	17.7	39.0

Densities 7.85, 7.9 and 8.0 g/cm3.
Calculated from the dimensions as the standard gives them, with no allowance for tolerance.

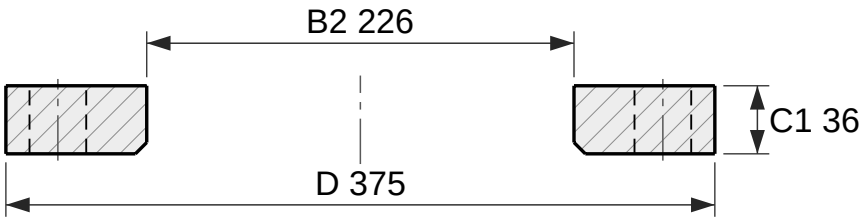

Section

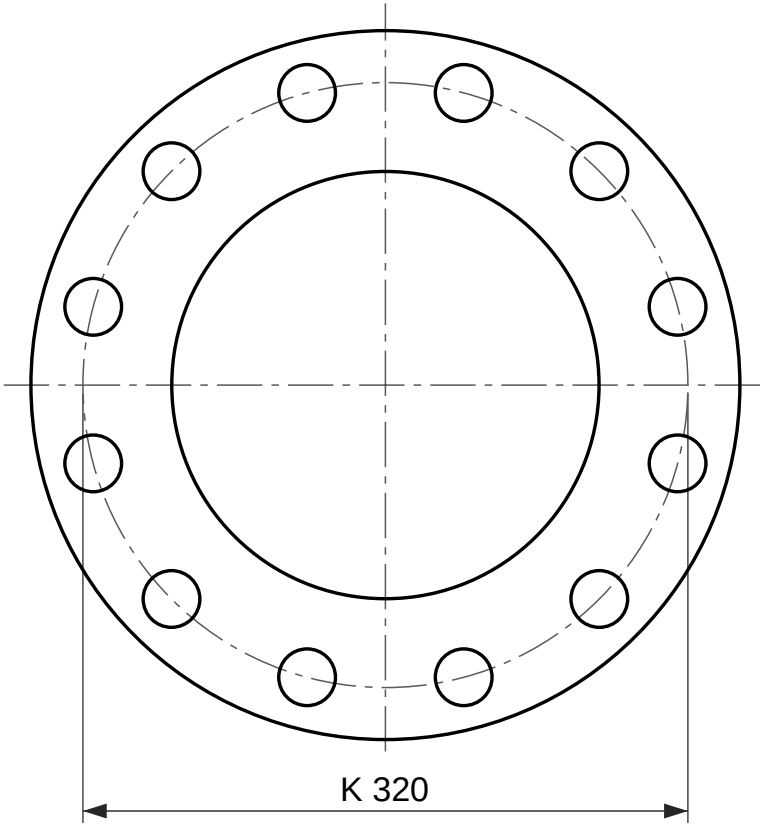

12 holes Ø30

Face view

Loose plate flange, EN 1092-1 type 02, PN 40

DN 200, for a collar type 32, 33, 35, 36 or 37

Designation: Flange EN 1092-1/02/DN 200/PN 40
Dimensions per EN 1092-1:2018, Table 15 (PN 40) and Table 8 (facing); tolerances per EN 1092-1.
A loose plate flange turns on a collar, EN 1092-1 type 32, 33, 35, 36 or 37, which is welded to the pipe and is not drawn here. The collar carries the joint face.
Reference drawing. The purchase order and EN 1092-1 govern.
Generated at rajendradatacenter.com/flanges/en-1092-1/

Dimension	mm	in
D Outside diameter	375	14.76
C1 Flange thickness	36	1.42
B2 Bore	226	8.90
E Chamfer at the bore	6	0.24
K Bolt circle diameter	320	12.60
L Bolt holes, 12 off	30	1.18

12 bolts M27; holes 30 mm (1.18 in)

RAJENDRA INDUSTRIAL CORPORATION
rajendradatacenter.com
Drawing RIC-EN1092-02-PN40-DN200
Scale 1:4 on A4
Units: mm (inches)
Date 2026-11-22
Quote: rajendradatacenter.com/rfq/
sales@rajendradatacenter.com
+91 74338 71355