Approx. weight

Material	kg	lb
Carbon steel	2.7	5.9
Stainless steel 304 and 304L	2.7	5.9
Stainless steel 316 and 316L	2.7	6.0

Densities 7.85, 7.9 and 8.0 g/cm3.
Calculated from the dimensions as the standard gives them, with no allowance for tolerance.

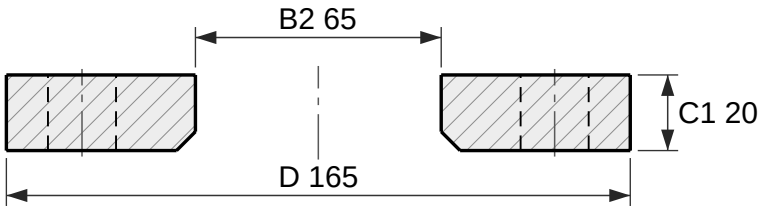

Section

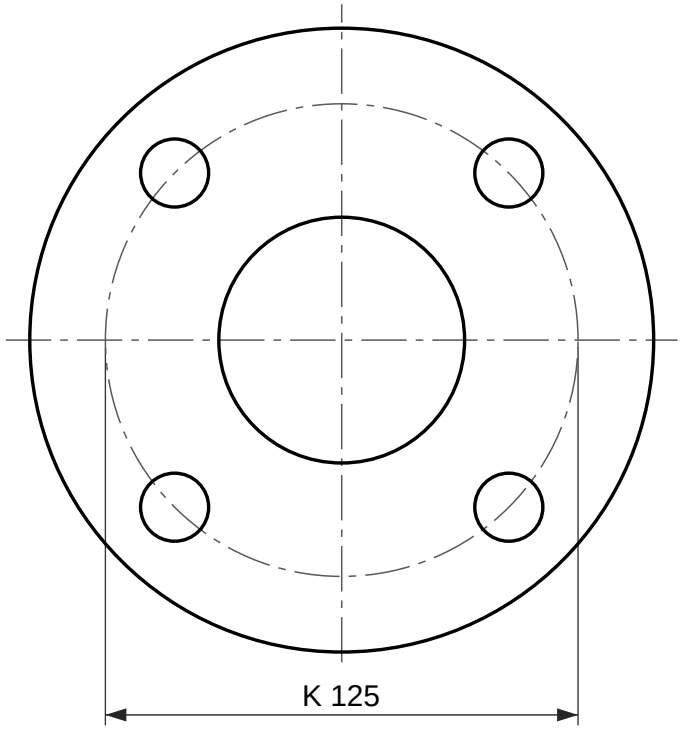

4 holes Ø18

Face view

Loose plate flange, EN 1092-1 type 02, PN 25

DN 50, for a collar type 32, 33, 35, 36 or 37

Designation: Flange EN 1092-1/02/DN 50/PN 25
Dimensions per EN 1092-1:2018, Table 14 (PN 25) and Table 8 (facing); tolerances per EN 1092-1.
A loose plate flange turns on a collar, EN 1092-1 type 32, 33, 35, 36 or 37, which is welded to the pipe and is not drawn here. The collar carries the joint face.
EN 1092-1 gives PN 25 the same dimensions as PN 10, PN 16, PN 40 in DN 50; only the marking differs.
Reference drawing. The purchase order and EN 1092-1 govern.
Generated at rajendradatacenter.com/flanges/en-1092-1/

Dimension	mm	in
D Outside diameter	165	6.50
C1 Flange thickness	20	0.79
B2 Bore	65	2.56
E Chamfer at the bore	5	0.20
K Bolt circle diameter	125	4.92
L Bolt holes, 4 off	18	0.71

4 bolts M16; holes 18 mm (0.71 in)

RAJENDRA INDUSTRIAL CORPORATION
rajendradatacenter.com
Drawing RIC-EN1092-02-PN25-DN50
Scale 1:2 on A4
Units: mm (inches)
Date 2026-11-22
Quote: rajendradatacenter.com/rfq/
sales@rajendradatacenter.com
+91 74338 71355