Approx. weight

Material	kg	lb
Carbon steel	98.8	218
Stainless steel 304 and 304L	99.4	219
Stainless steel 316 and 316L	101	222

Densities 7.85, 7.9 and 8.0 g/cm3.
Calculated from the dimensions as the standard gives them, with no allowance for tolerance.

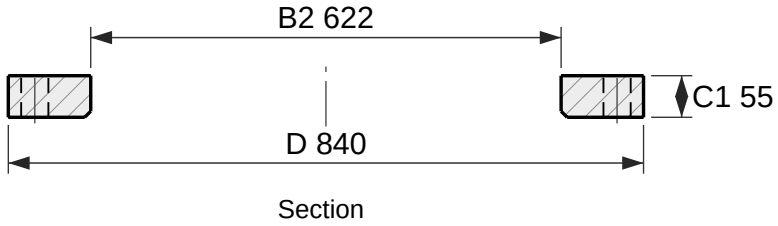

Section

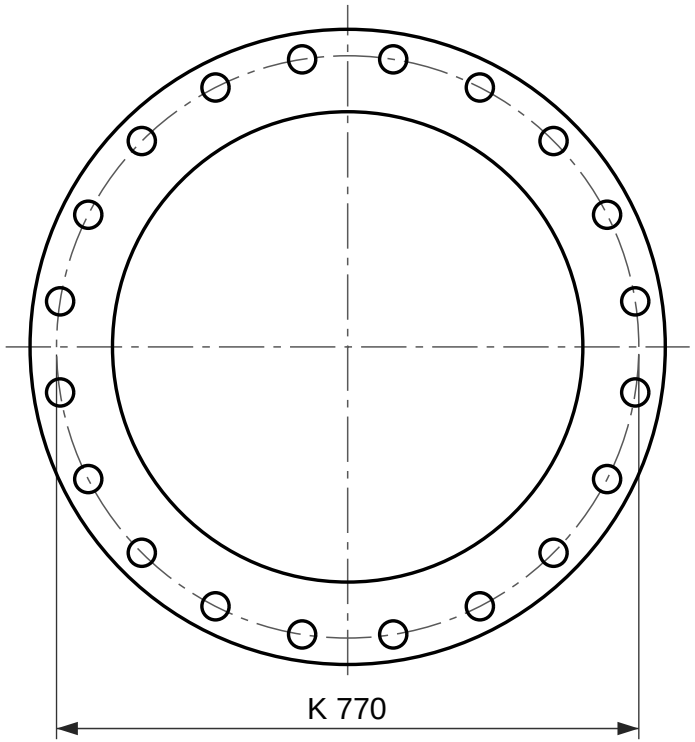

20 holes Ø36

Face view

Loose plate flange, EN 1092-1 type 02, PN 16

DN 600, for a collar type 32, 33, 35, 36 or 37

Designation: Flange EN 1092-1/02/DN 600/PN 16
Dimensions per EN 1092-1:2018, Table 13 (PN 16) and Table 8 (facing); tolerances per EN 1092-1.
A loose plate flange turns on a collar, EN 1092-1 type 32, 33, 35, 36 or 37, which is welded to the pipe and is not drawn here. The collar carries the joint face.
Reference drawing. The purchase order and EN 1092-1 govern.
Generated at rajendradatacenter.com/flanges/en-1092-1/

Dimension	mm	in
D Outside diameter	840	33.07
C1 Flange thickness	55	2.17
B2 Bore	622	24.49
E Chamfer at the bore	8	0.31
K Bolt circle diameter	770	30.31
L Bolt holes, 20 off	36	1.42

20 bolts M33; holes 36 mm (1.42 in)

RAJENDRA INDUSTRIAL CORPORATION
rajendradatacenter.com
Drawing RIC-EN1092-02-PN16-DN600
Scale 1:10 on A4
Units: mm (inches)
Date 2026-11-22
Quote: rajendradatacenter.com/rfq/
sales@rajendradatacenter.com
+91 74338 71355