Approx. weight

Material	kg	lb
Carbon steel	11.2	24.7
Stainless steel 304 and 304L	11.3	24.8
Stainless steel 316 and 316L	11.4	25.2

Densities 7.85, 7.9 and 8.0 g/cm3.
Calculated from the dimensions as the standard gives them, with no allowance for tolerance.

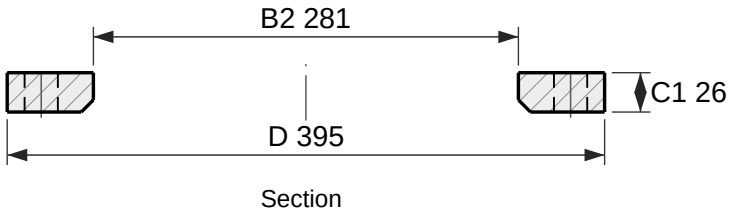

Section

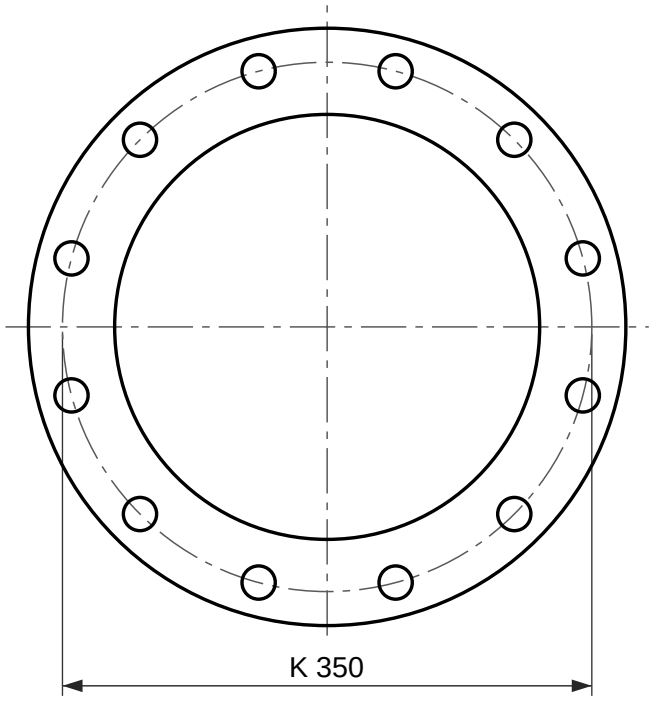

12 holes Ø22
Face view

Loose plate flange, EN 1092-1 type 02, PN 10

DN 250, for a collar type 32, 33, 35, 36 or 37

Designation: Flange EN 1092-1/02/DN 250/PN 10
Dimensions per EN 1092-1:2018, Table 12 (PN 10) and Table 8 (facing); tolerances per EN 1092-1.
A loose plate flange turns on a collar, EN 1092-1 type 32, 33, 35, 36 or 37, which is welded to the pipe and is not drawn here. The collar carries the joint face.
Reference drawing. The purchase order and EN 1092-1 govern.
Generated at rajendradatacenter.com/flanges/en-1092-1/

Dimension	mm	in
D Outside diameter	395	15.55
C1 Flange thickness	26	1.02
B2 Bore	281	11.06
E Chamfer at the bore	8	0.31
K Bolt circle diameter	350	13.78
L Bolt holes, 12 off	22	0.87

12 bolts M20; holes 22 mm (0.87 in)

RAJENDRA INDUSTRIAL CORPORATION

rajendradatacenter.com
Drawing RIC-EN1092-02-PN10-DN250
Scale 1:5 on A4
Units: mm (inches)
Date 2026-11-22
Quote: rajendradatacenter.com/rfq/
sales@rajendradatacenter.com
+91 74338 71355