Approx. weight

Material	kg	lb
Carbon steel	8.9	19.6
Stainless steel 304 and 304L	8.9	19.7
Stainless steel 316 and 316L	9.0	19.9

Densities 7.85, 7.9 and 8.0 g/cm3.
Calculated from the dimensions as the standard gives them, with no allowance for tolerance.

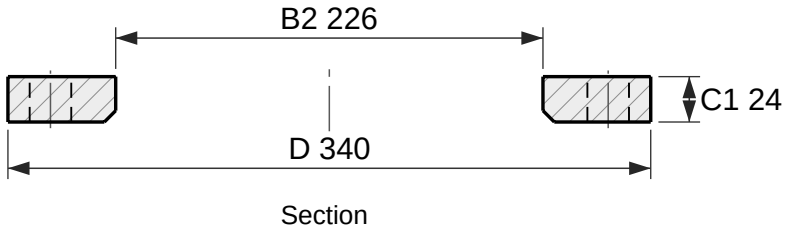

Section

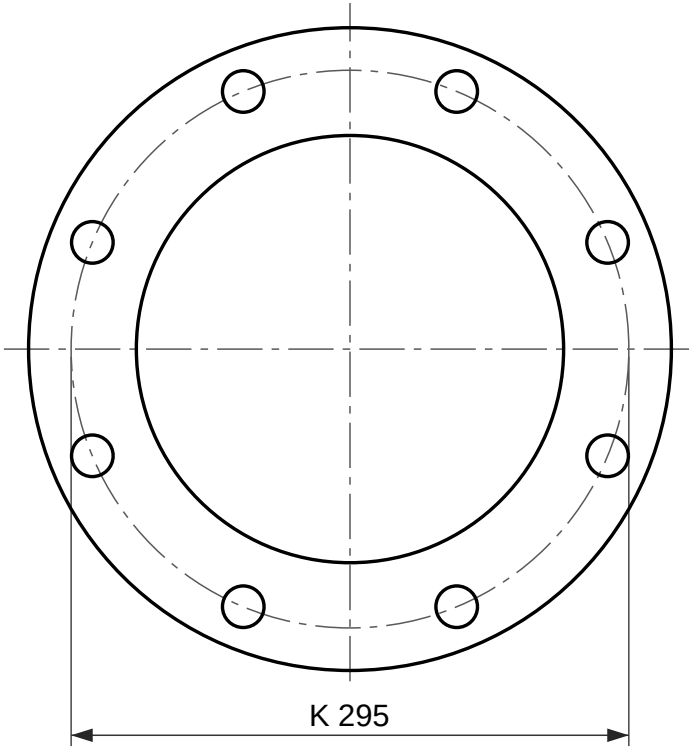

8 holes Ø22

Face view

Loose plate flange, EN 1092-1 type 02, PN 10

DN 200, for a collar type 32, 33, 35, 36 or 37

Designation: Flange EN 1092-1/02/DN 200/PN 10
Dimensions per EN 1092-1:2018, Table 12 (PN 10) and Table 8 (facing); tolerances per EN 1092-1.
A loose plate flange turns on a collar, EN 1092-1 type 32, 33, 35, 36 or 37, which is welded to the pipe and is not drawn here. The collar carries the joint face.
Reference drawing. The purchase order and EN 1092-1 govern.
Generated at rajendradatacenter.com/flanges/en-1092-1/

Dimension	mm	in
D Outside diameter	340	13.39
C1 Flange thickness	24	0.94
B2 Bore	226	8.90
E Chamfer at the bore	6	0.24
K Bolt circle diameter	295	11.61
L Bolt holes, 8 off	22	0.87

8 bolts M20; holes 22 mm (0.87 in)

RAJENDRA INDUSTRIAL CORPORATION

rajendradatacenter.com
Drawing RIC-EN1092-02-PN10-DN200
Scale 1:4 on A4
Units: mm (inches)
Date 2026-11-22
Quote: rajendradatacenter.com/rfq/
sales@rajendradatacenter.com
+91 74338 71355