Approx. weight

Material	kg	lb
Carbon steel	5.2	11.5
Stainless steel 304 and 304L	5.2	11.6
Stainless steel 316 and 316L	5.3	11.7

Densities 7.85, 7.9 and 8.0 g/cm3.
Calculated from the dimensions as the standard gives them, with no allowance for tolerance.

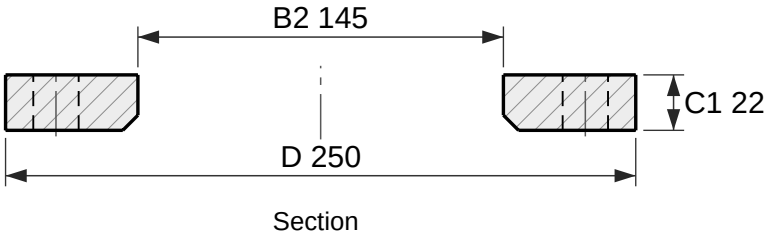

Section

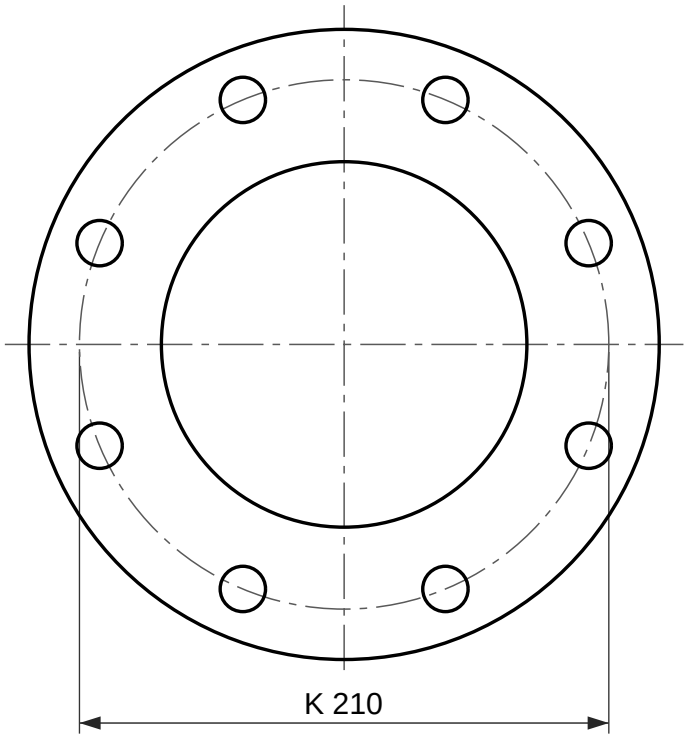

8 holes Ø18

Face view

Loose plate flange, EN 1092-1 type 02, PN 10

DN 125, for a collar type 32, 33, 35, 36 or 37

Designation: Flange EN 1092-1/02/DN 125/PN 10
Dimensions per EN 1092-1:2018, Table 12 (PN 10) and Table 8 (facing); tolerances per EN 1092-1.
A loose plate flange turns on a collar, EN 1092-1 type 32, 33, 35, 36 or 37, which is welded to the pipe and is not drawn here. The collar carries the joint face.
EN 1092-1 gives PN 10 the same dimensions as PN 16 in DN 125; only the marking differs.
Reference drawing. The purchase order and EN 1092-1 govern.
Generated at rajendradatacenter.com/flanges/en-1092-1/

Dimension	mm	in
D Outside diameter	250	9.84
C1 Flange thickness	22	0.87
B2 Bore	145	5.71
E Chamfer at the bore	6	0.24
K Bolt circle diameter	210	8.27
L Bolt holes, 8 off	18	0.71

8 bolts M16; holes 18 mm (0.71 in)

RAJENDRA INDUSTRIAL CORPORATION
rajendradatacenter.com
Drawing RIC-EN1092-02-PN10-DN125
Scale 1:3 on A4
Units: mm (inches)
Date 2026-11-22
Quote: rajendradatacenter.com/rfq/
sales@rajendradatacenter.com
+91 74338 71355