Approx. weight

Material	kg	lb
Carbon steel	5.9	13.0
Stainless steel 304 and 304L	5.9	13.1
Stainless steel 316 and 316L	6.0	13.2

Densities 7.85, 7.9 and 8.0 g/cm3.
Calculated from the dimensions as the standard gives them, with no allowance for tolerance.

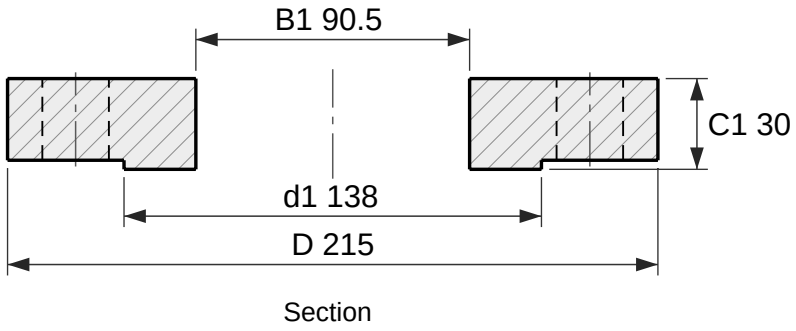

Section

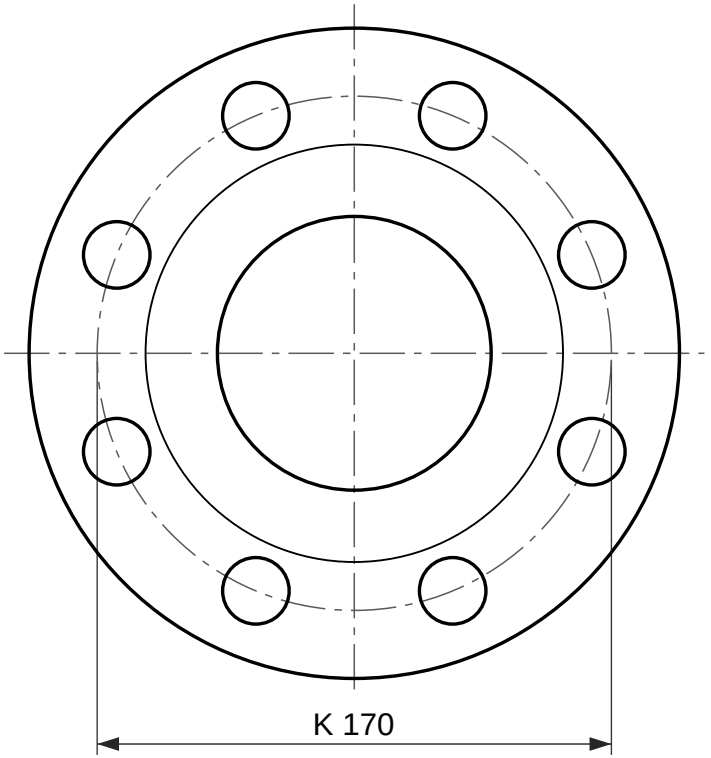

8 holes Ø22

Face view

Plate flange, EN 1092-1 type 01, PN 63

DN 80, facing type B1 (raised face)

Designation: Flange EN 1092-1/01/B1/DN 80/PN 63
Dimensions per EN 1092-1:2018, Table 16 (PN 63) and Table 8 (facing); tolerances per EN 1092-1.
C1 includes the raised face f1, as EN 1092-1 measures it.
Reference drawing. The purchase order and EN 1092-1 govern.
Generated at rajendradatacenter.com/flanges/en-1092-1/

Dimension	mm	in
D Outside diameter	215	8.46
d1 Raised face diameter	138	5.43
f1 Raised face height	3	0.12
C1 Flange thickness, raised face included	30	1.18
B1 Bore	90.5	3.56
K Bolt circle diameter	170	6.69
L Bolt holes, 8 off	22	0.87

8 bolts M20; holes 22 mm (0.87 in)

RAJENDRA INDUSTRIAL CORPORATION
rajendradatacenter.com
Drawing RIC-EN1092-01-PN63-DN80-B1
Scale 1:2.5 on A4
Units: mm (inches)
Date 2026-11-22
Quote: rajendradatacenter.com/rfq/
sales@rajendradatacenter.com
+91 74338 71355