Approx. weight

Material	kg	lb
Carbon steel	16.8	37.1
Stainless steel 304 and 304L	16.9	37.4
Stainless steel 316 and 316L	17.2	37.8

Densities 7.85, 7.9 and 8.0 g/cm3.
Calculated from the dimensions as the standard gives them, with no allowance for tolerance.

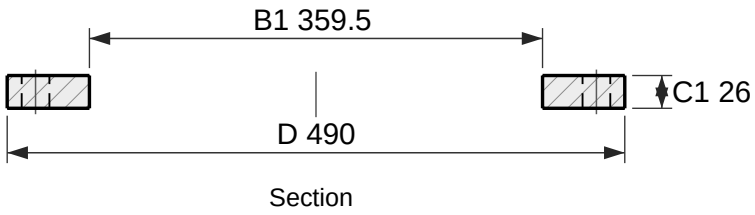

Section

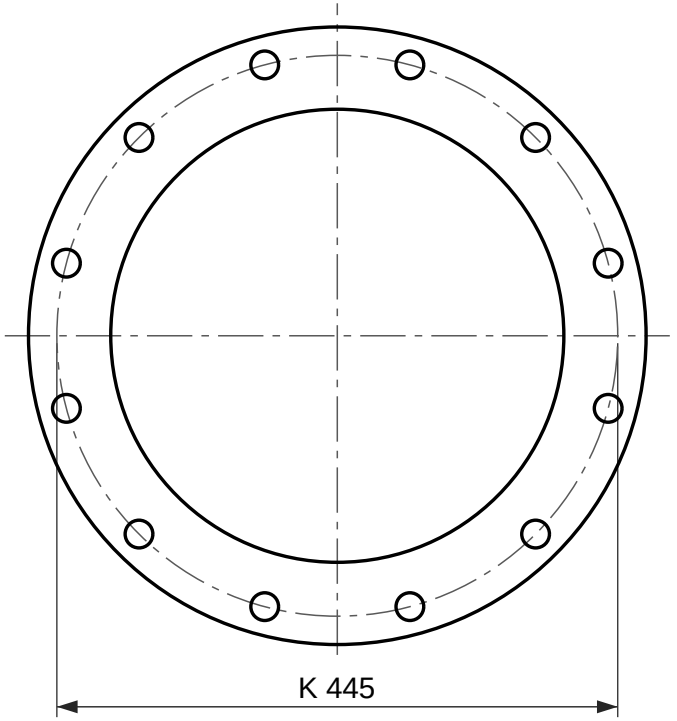

12 holes Ø22

Face view

Plate flange, EN 1092-1 type 01, PN 6

DN 350, facing type A (flat face)

Designation: Flange EN 1092-1/01/A/DN 350/PN 6
Dimensions per EN 1092-1:2018, Table 11 (PN 6) and Table 8 (facing); tolerances per EN 1092-1.
Facing type A (flat face), as 5.7.2.3 gives this type unless the order says otherwise.
Reference drawing. The purchase order and EN 1092-1 govern.
Generated at rajendradatacenter.com/flanges/en-1092-1/

Dimension	mm	in
D Outside diameter	490	19.29
C1 Flange thickness	26	1.02
B1 Bore	359.5	14.15
K Bolt circle diameter	445	17.52
L Bolt holes, 12 off	22	0.87

12 bolts M20; holes 22 mm (0.87 in)

RAJENDRA INDUSTRIAL CORPORATION
rajendradatacenter.com
Drawing RIC-EN1092-01-PN6-DN350-A
Scale 1:6 on A4
Units: mm (inches)
Date 2026-11-22
Quote: rajendradatacenter.com/rfq/
sales@rajendradatacenter.com
+91 74338 71355