**Approx. weight**

| Material | kg | lb |
|---|---|---|
| Carbon steel | 97.1 | 214 |
| Stainless steel 304 and 304L | 97.7 | 215 |
| Stainless steel 316 and 316L | 99.0 | 218 |

Densities 7.85, 7.9 and 8.0 g/cm3.
Calculated from the dimensions as the standard gives them, with no allowance for tolerance.

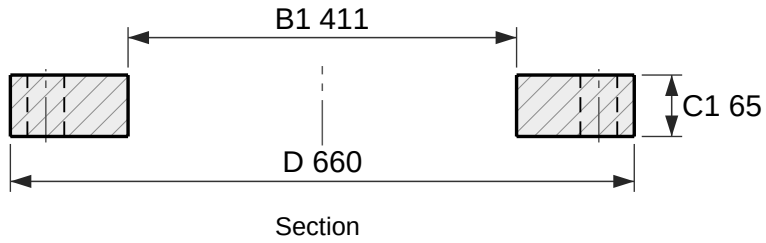


Section

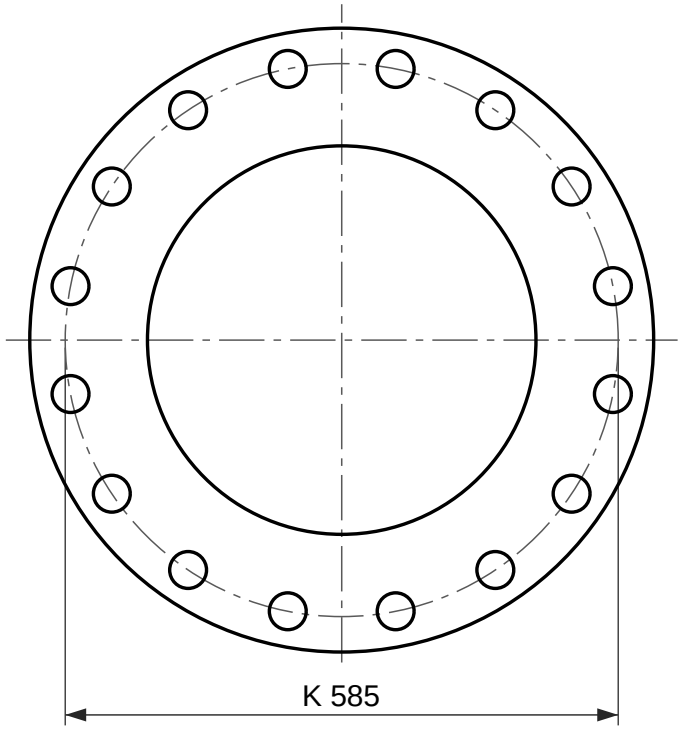


16 holes Ø39

Face view

# Plate flange, EN 1092-1 type 01, PN 40

DN 400, facing type A (flat face)

Designation: Flange EN 1092-1/01/A/DN 400/PN 40
Dimensions per EN 1092-1:2018, Table 15 (PN 40) and Table 8 (facing); tolerances per EN 1092-1.
Facing type A (flat face), as 5.7.2.3 gives this type unless the order says otherwise.
Reference drawing. The purchase order and EN 1092-1 govern.
Generated at rajendradatacenter.com/flanges/en-1092-1/

| Dimension | mm | in |
|---|---|---|
| D Outside diameter | 660 | 25.98 |
| C1 Flange thickness | 65 | 2.56 |
| B1 Bore | 411 | 16.18 |
| K Bolt circle diameter | 585 | 23.03 |
| L Bolt holes, 16 off | 39 | 1.54 |

16 bolts M36; holes 39 mm (1.54 in)

RAJENDRA INDUSTRIAL CORPORATION
rajendradatacenter.com
Drawing RIC-EN1092-01-PN40-DN400-A
Scale 1:8 on A4
Units: mm (inches)
Date 2026-11-22
Quote: rajendradatacenter.com/rfq/
sales@rajendradatacenter.com
+91 74338 71355