Approx. weight

Material	kg	lb
Carbon steel	45.1	99.3
Stainless steel 304 and 304L	45.3	100.0
Stainless steel 316 and 316L	45.9	101

Densities 7.85, 7.9 and 8.0 g/cm3.
Calculated from the dimensions as the standard gives them, with no allowance for tolerance.

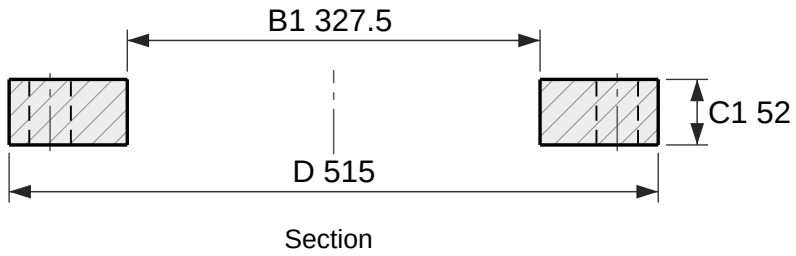

Section

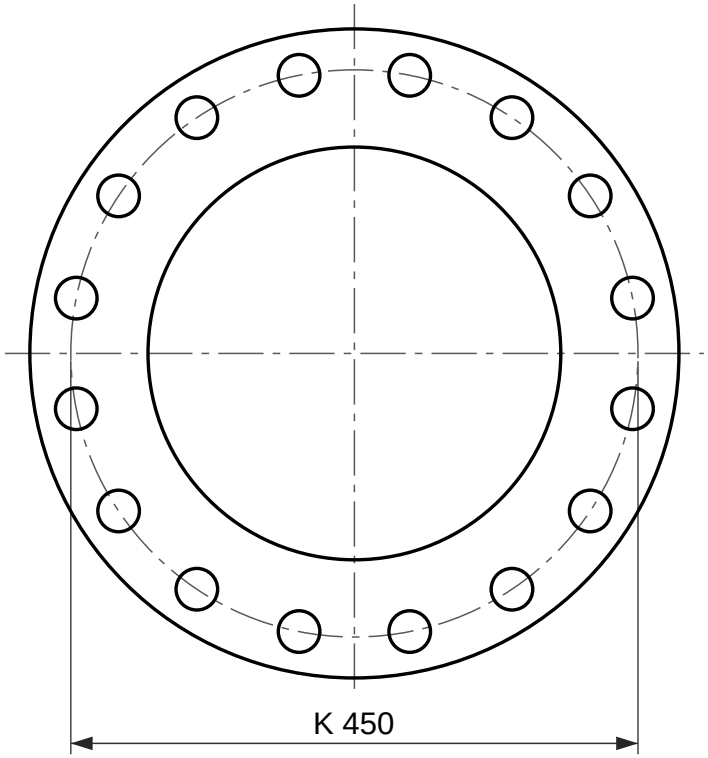

16 holes Ø33

Face view

Plate flange, EN 1092-1 type 01, PN 40

DN 300, facing type A (flat face)

Designation: Flange EN 1092-1/01/A/DN 300/PN 40
Dimensions per EN 1092-1:2018, Table 15 (PN 40) and Table 8 (facing); tolerances per EN 1092-1.
Facing type A (flat face), as 5.7.2.3 gives this type unless the order says otherwise.
Reference drawing. The purchase order and EN 1092-1 govern.
Generated at rajendradatacenter.com/flanges/en-1092-1/

Dimension	mm	in
D Outside diameter	515	20.28
C1 Flange thickness	52	2.05
B1 Bore	327.5	12.89
K Bolt circle diameter	450	17.72
L Bolt holes, 16 off	33	1.30

16 bolts M30; holes 33 mm (1.30 in)

RAJENDRA INDUSTRIAL CORPORATION
rajendradatacenter.com
Drawing RIC-EN1092-01-PN40-DN300-A
Scale 1:6 on A4
Units: mm (inches)
Date 2026-11-22
Quote: rajendradatacenter.com/rfq/
sales@rajendradatacenter.com
+91 74338 71355