Approx. weight

Material	kg	lb
Carbon steel	17.9	39.5
Stainless steel 304 and 304L	18.0	39.8
Stainless steel 316 and 316L	18.3	40.3

Densities 7.85, 7.9 and 8.0 g/cm3.
Calculated from the dimensions as the standard gives them, with no allowance for tolerance.

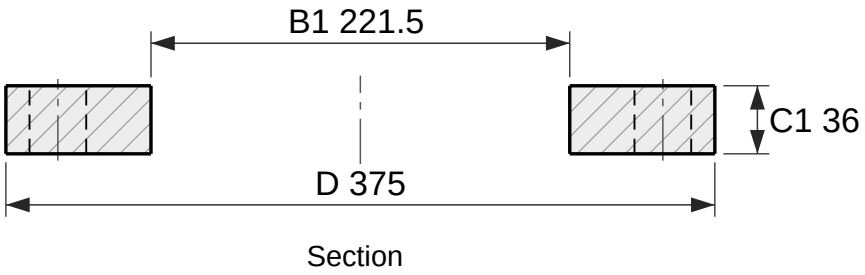

Section

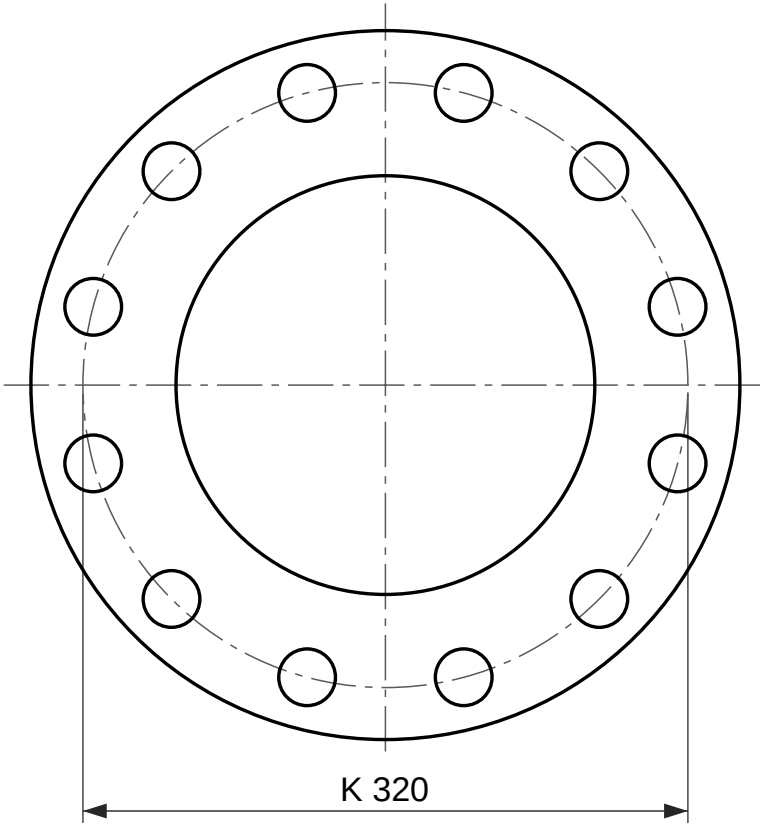

12 holes Ø30

Face view

Plate flange, EN 1092-1 type 01, PN 40

DN 200, facing type A (flat face)

Designation: Flange EN 1092-1/01/A/DN 200/PN 40
Dimensions per EN 1092-1:2018, Table 15 (PN 40) and Table 8 (facing); tolerances per EN 1092-1.
Facing type A (flat face), as 5.7.2.3 gives this type unless the order says otherwise.
Reference drawing. The purchase order and EN 1092-1 govern.
Generated at rajendradatacenter.com/flanges/en-1092-1/

Dimension	mm	in
D Outside diameter	375	14.76
C1 Flange thickness	36	1.42
B1 Bore	221.5	8.72
K Bolt circle diameter	320	12.60
L Bolt holes, 12 off	30	1.18

12 bolts M27; holes 30 mm (1.18 in)

RAJENDRA INDUSTRIAL CORPORATION
rajendradatacenter.com
Drawing RIC-EN1092-01-PN40-DN200-A
Scale 1:4 on A4
Units: mm (inches)
Date 2026-11-22
Quote: rajendradatacenter.com/rfq/
sales@rajendradatacenter.com
+91 74338 71355