Approx. weight

Material	kg	lb
Carbon steel	127	281
Stainless steel 304 and 304L	128	282
Stainless steel 316 and 316L	130	286

Densities 7.85, 7.9 and 8.0 g/cm3.
Calculated from the dimensions as the standard gives them, with no allowance for tolerance.

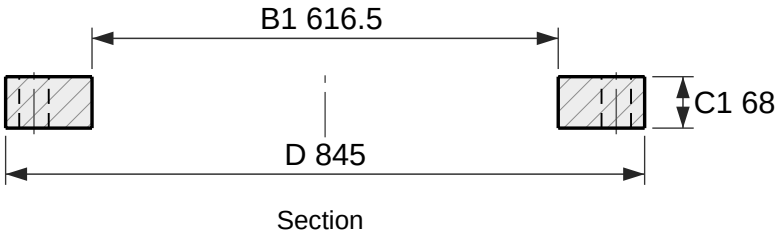

Section

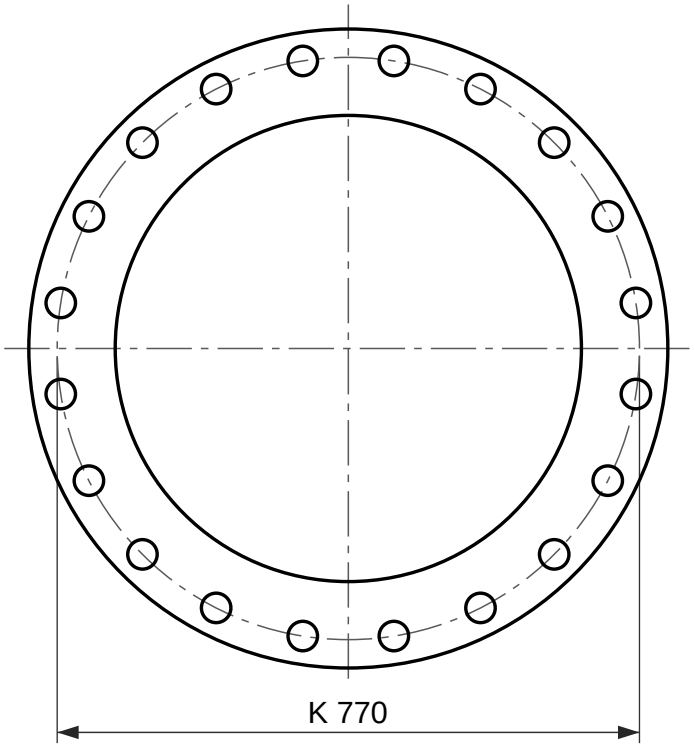

20 holes Ø39

Face view

Plate flange, EN 1092-1 type 01, PN 25

DN 600, facing type A (flat face)

Designation: Flange EN 1092-1/01/A/DN 600/PN 25
Dimensions per EN 1092-1:2018, Table 14 (PN 25) and Table 8 (facing); tolerances per EN 1092-1.
Facing type A (flat face), as 5.7.2.3 gives this type unless the order says otherwise.
Reference drawing. The purchase order and EN 1092-1 govern.
Generated at rajendradatacenter.com/flanges/en-1092-1/

Dimension	mm	in
D Outside diameter	845	33.27
C1 Flange thickness	68	2.68
B1 Bore	616.5	24.27
K Bolt circle diameter	770	30.31
L Bolt holes, 20 off	39	1.54

20 bolts M36; holes 39 mm (1.54 in)

RAJENDRA INDUSTRIAL CORPORATION
rajendradatacenter.com
Drawing RIC-EN1092-01-PN25-DN600-A
Scale 1:10 on A4
Units: mm (inches)
Date 2026-11-22
Quote: rajendradatacenter.com/rfq/
sales@rajendradatacenter.com
+91 74338 71355