**Approx. weight**

| Material | kg | lb |
|---|---|---|
| Carbon steel | 87.0 | 192 |
| Stainless steel 304 and 304L | 87.6 | 193 |
| Stainless steel 316 and 316L | 88.7 | 195 |

Densities 7.85, 7.9 and 8.0 g/cm3.
Calculated from the dimensions as the standard gives them, with no allowance for tolerance.

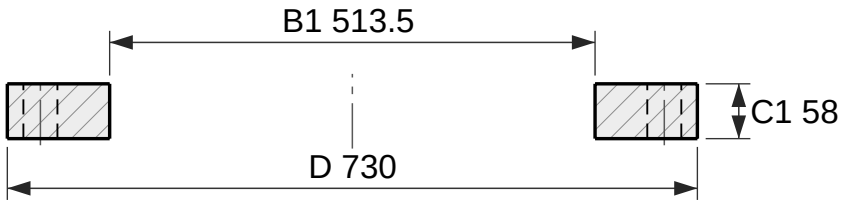


Section

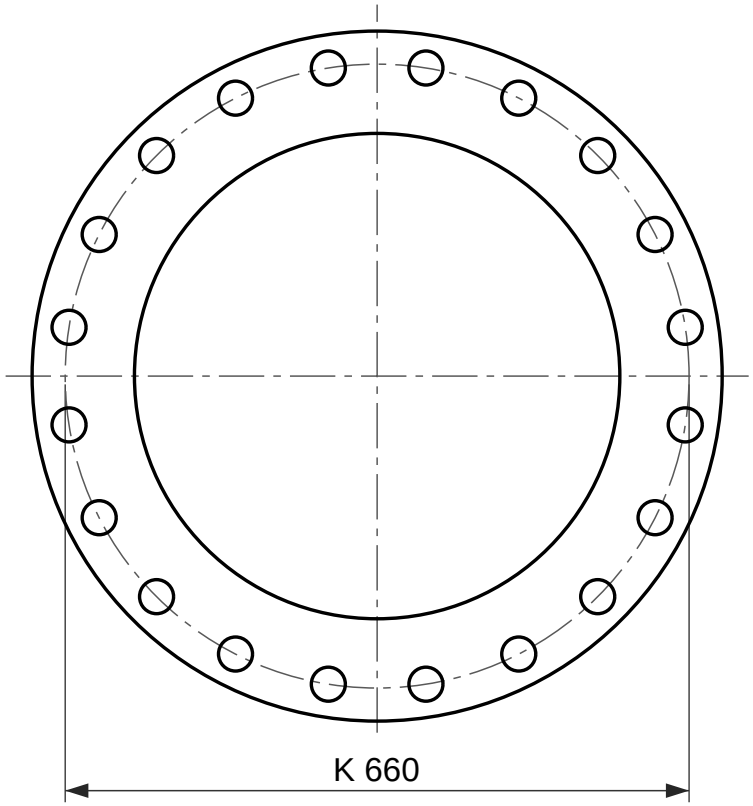


20 holes Ø36

Face view

# Plate flange, EN 1092-1 type 01, PN 25

DN 500, facing type A (flat face)

Designation: Flange EN 1092-1/01/A/DN 500/PN 25
Dimensions per EN 1092-1:2018, Table 14 (PN 25) and Table 8 (facing); tolerances per EN 1092-1.
Facing type A (flat face), as 5.7.2.3 gives this type unless the order says otherwise.
Reference drawing. The purchase order and EN 1092-1 govern.
Generated at rajendradatacenter.com/flanges/en-1092-1/

| Dimension | mm | in |
|---|---|---|
| D Outside diameter | 730 | 28.74 |
| C1 Flange thickness | 58 | 2.28 |
| B1 Bore | 513.5 | 20.22 |
| K Bolt circle diameter | 660 | 25.98 |
| L Bolt holes, 20 off | 36 | 1.42 |

20 bolts M33; holes 36 mm (1.42 in)

RAJENDRA INDUSTRIAL CORPORATION
rajendradatacenter.com
Drawing RIC-EN1092-01-PN25-DN500-A
Scale 1:8 on A4
Units: mm (inches)
Date 2026-11-22
Quote: rajendradatacenter.com/rfq/
sales@rajendradatacenter.com
+91 74338 71355