Approx. weight

Material	kg	lb
Carbon steel	8.2	18.1
Stainless steel 304 and 304L	8.2	18.2
Stainless steel 316 and 316L	8.4	18.4

Densities 7.85, 7.9 and 8.0 g/cm3.
Calculated from the dimensions as the standard gives them, with no allowance for tolerance.

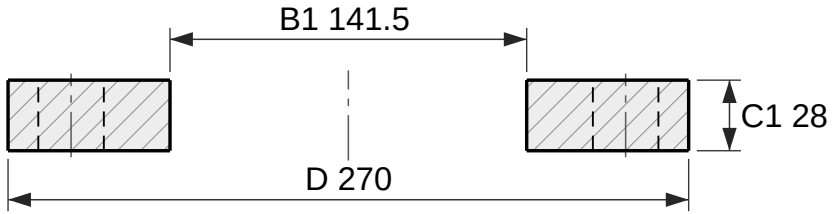

Section

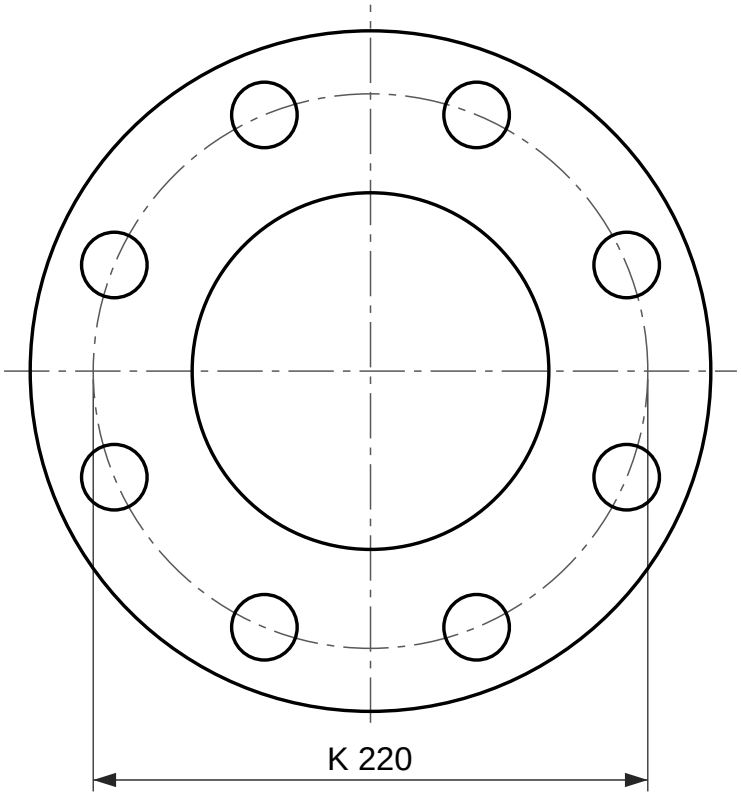

8 holes Ø26

Face view

Plate flange, EN 1092-1 type 01, PN 25

DN 125, facing type A (flat face)

Designation: Flange EN 1092-1/01/A/DN 125/PN 25
Dimensions per EN 1092-1:2018, Table 14 (PN 25) and Table 8 (facing); tolerances per EN 1092-1.
Facing type A (flat face), as 5.7.2.3 gives this type unless the order says otherwise.
EN 1092-1 gives PN 25 the same dimensions as PN 40 in DN 125; only the marking differs.
Reference drawing. The purchase order and EN 1092-1 govern.
Generated at rajendradatacenter.com/flanges/en-1092-1/

Dimension	mm	in
D Outside diameter	270	10.63
C1 Flange thickness	28	1.10
B1 Bore	141.5	5.57
K Bolt circle diameter	220	8.66
L Bolt holes, 8 off	26	1.02

8 bolts M24; holes 26 mm (1.02 in)

RAJENDRA INDUSTRIAL CORPORATION
rajendradatacenter.com
Drawing RIC-EN1092-01-PN25-DN125-A
Scale 1:3 on A4
Units: mm (inches)
Date 2026-11-22
Quote: rajendradatacenter.com/rfq/
sales@rajendradatacenter.com
+91 74338 71355