Approx. weight

Material	kg	lb
Carbon steel	69.0	152
Stainless steel 304 and 304L	69.4	153
Stainless steel 316 and 316L	70.3	155

Densities 7.85, 7.9 and 8.0 g/cm3.
Calculated from the dimensions as the standard gives them, with no allowance for tolerance.

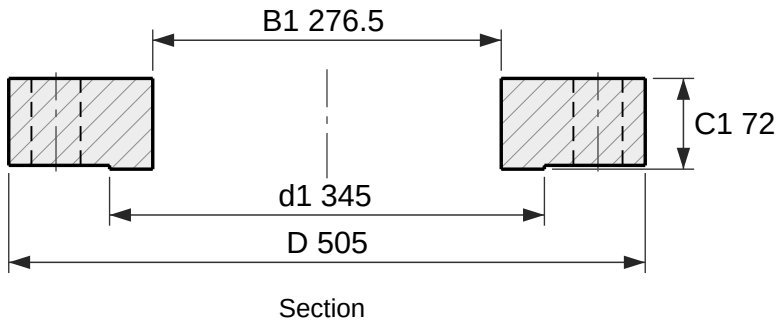

Section

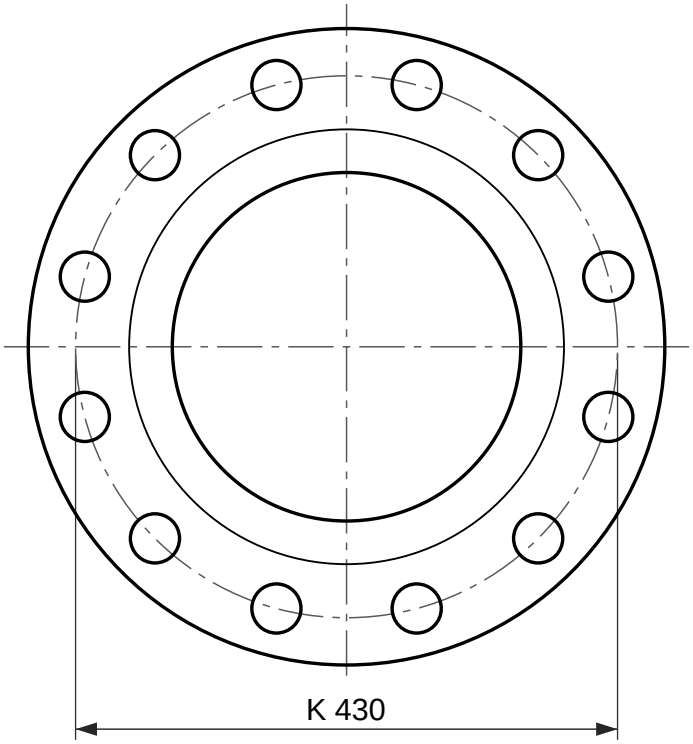

12 holes Ø39

Face view

Plate flange, EN 1092-1 type 01, PN 100

DN 250, facing type B1 (raised face)

Designation: Flange EN 1092-1/01/B1/DN 250/PN 100
Dimensions per EN 1092-1:2018, Table 17 (PN 100) and Table 8 (facing); tolerances per EN 1092-1.
C1 includes the raised face f1, as EN 1092-1 measures it.
Reference drawing. The purchase order and EN 1092-1 govern.
Generated at rajendradatacenter.com/flanges/en-1092-1/

Dimension	mm	in
D Outside diameter	505	19.88
d1 Raised face diameter	345	13.58
f1 Raised face height	3	0.12
C1 Flange thickness, raised face included	72	2.83
B1 Bore	276.5	10.89
K Bolt circle diameter	430	16.93
L Bolt holes, 12 off	39	1.54

12 bolts M36; holes 39 mm (1.54 in)

RAJENDRA INDUSTRIAL CORPORATION
rajendradatacenter.com
Drawing RIC-EN1092-01-PN100-DN250-B1
Scale 1:6 on A4
Units: mm (inches)
Date 2026-11-22
Quote: rajendradatacenter.com/rfq/
sales@rajendradatacenter.com
+91 74338 71355