Approx. weight

Material	kg	lb
Carbon steel	54.5	120
Stainless steel 304 and 304L	54.8	121
Stainless steel 316 and 316L	55.5	122

Densities 7.85, 7.9 and 8.0 g/cm3.
Calculated from the dimensions as the standard gives them, with no allowance for tolerance.

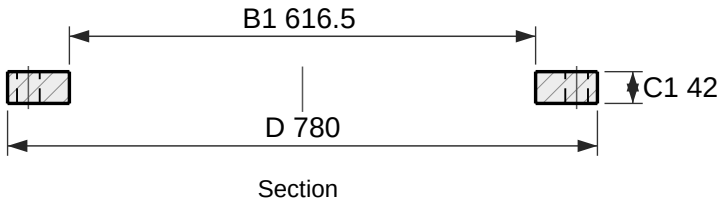

Section

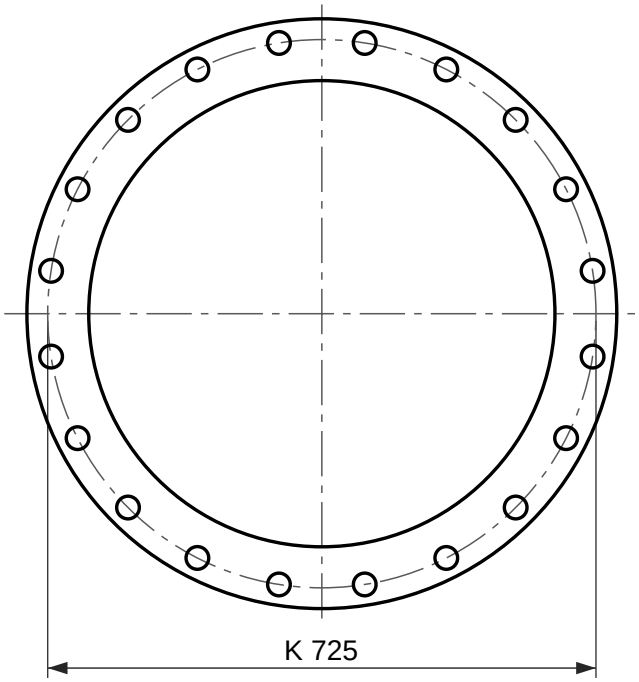

20 holes Ø30
Face view

Plate flange, EN 1092-1 type 01, PN 10

DN 600, facing type A (flat face)

Designation: Flange EN 1092-1/01/A/DN 600/PN 10
Dimensions per EN 1092-1:2018, Table 12 (PN 10) and Table 8 (facing); tolerances per EN 1092-1.
Facing type A (flat face), as 5.7.2.3 gives this type unless the order says otherwise.
Reference drawing. The purchase order and EN 1092-1 govern.
Generated at rajendradatacenter.com/flanges/en-1092-1/

Dimension	mm	in
D Outside diameter	780	30.71
C1 Flange thickness	42	1.65
B1 Bore	616.5	24.27
K Bolt circle diameter	725	28.54
L Bolt holes, 20 off	30	1.18

20 bolts M27; holes 30 mm (1.18 in)

RAJENDRA INDUSTRIAL CORPORATION

rajendradatacenter.com
Drawing RIC-EN1092-01-PN10-DN600-A
Scale 1:10 on A4
Units: mm (inches)
Date 2026-11-22
Quote: rajendradatacenter.com/rfq/
sales@rajendradatacenter.com
+91 74338 71355