Approx. weight

Material	kg	lb
Carbon steel	33.6	74.0
Stainless steel 304 and 304L	33.8	74.5
Stainless steel 316 and 316L	34.2	75.4

Densities 7.85, 7.9 and 8.0 g/cm3.
Calculated from the dimensions as the standard gives them, with no allowance for tolerance.

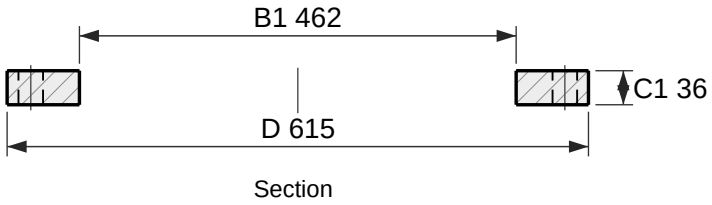

Section

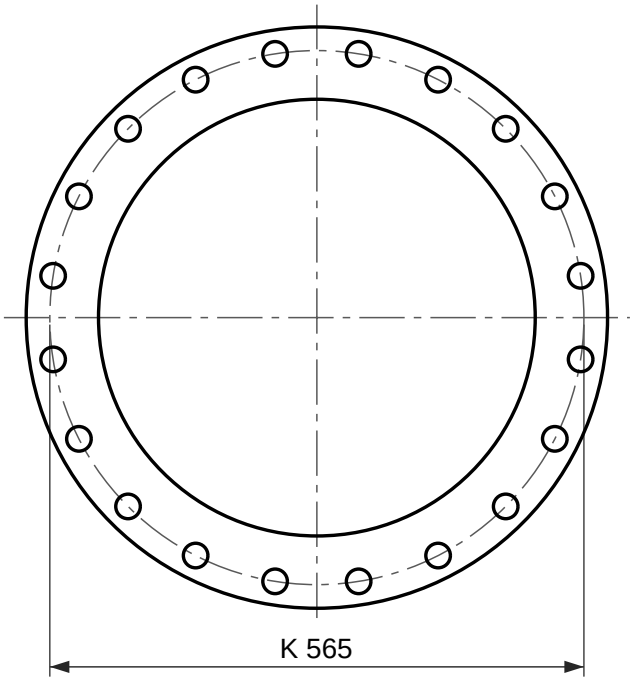

20 holes Ø26
Face view

Plate flange, EN 1092-1 type 01, PN 10

DN 450, facing type A (flat face)

Designation: Flange EN 1092-1/01/A/DN 450/PN 10
Dimensions per EN 1092-1:2018, Table 12 (PN 10) and Table 8 (facing); tolerances per EN 1092-1.
Facing type A (flat face), as 5.7.2.3 gives this type unless the order says otherwise.
Reference drawing. The purchase order and EN 1092-1 govern.
Generated at rajendradatacenter.com/flanges/en-1092-1/

Dimension	mm	in
D Outside diameter	615	24.21
C1 Flange thickness	36	1.42
B1 Bore	462	18.19
K Bolt circle diameter	565	22.24
L Bolt holes, 20 off	26	1.02

20 bolts M24; holes 26 mm (1.02 in)

RAJENDRA INDUSTRIAL CORPORATION
rajendradatacenter.com
Drawing RIC-EN1092-01-PN10-DN450-A
Scale 1:8 on A4
Units: mm (inches)
Date 2026-11-22
Quote: rajendradatacenter.com/rfq/
sales@rajendradatacenter.com
+91 74338 71355