**Approx. weight**

| Material | kg | lb |
|---|---|---|
| Carbon steel | 21.8 | 48.1 |
| Stainless steel 304 and 304L | 22.0 | 48.4 |
| Stainless steel 316 and 316L | 22.3 | 49.1 |

Densities 7.85, 7.9 and 8.0 g/cm3.
Calculated from the dimensions as the standard gives them, with no allowance for tolerance.

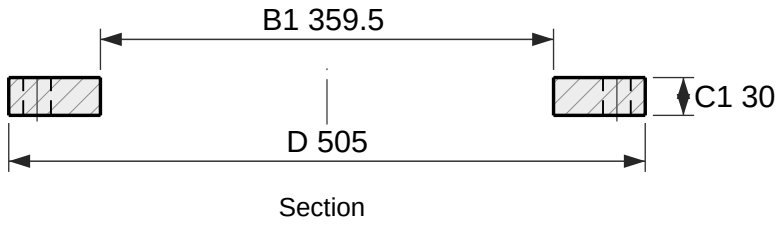


Section

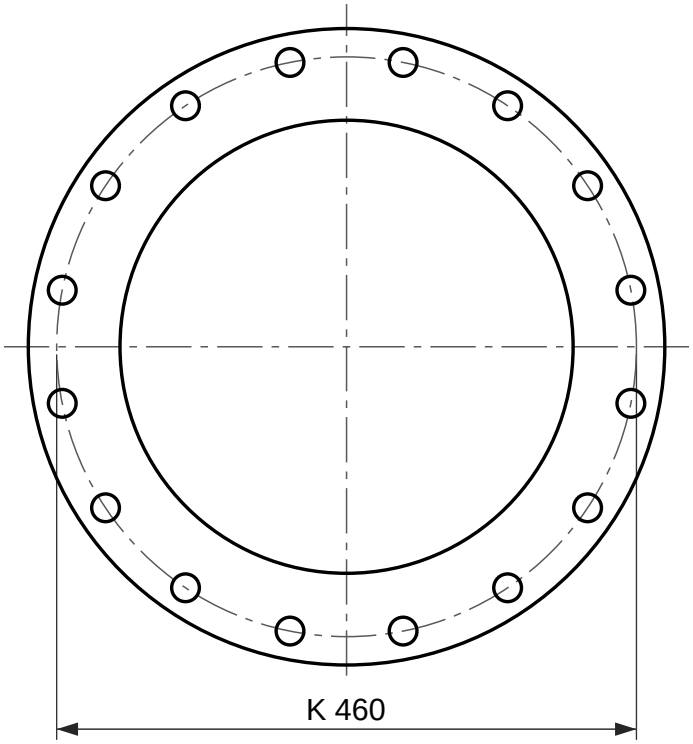


16 holes Ø22

Face view

# Plate flange, EN 1092-1 type 01, PN 10

DN 350, facing type A (flat face)

Designation: Flange EN 1092-1/01/A/DN 350/PN 10
Dimensions per EN 1092-1:2018, Table 12 (PN 10) and Table 8 (facing); tolerances per EN 1092-1.
Facing type A (flat face), as 5.7.2.3 gives this type unless the order says otherwise.
Reference drawing. The purchase order and EN 1092-1 govern.
Generated at rajendradatacenter.com/flanges/en-1092-1/

| Dimension | mm | in |
|---|---|---|
| D Outside diameter | 505 | 19.88 |
| C1 Flange thickness | 30 | 1.18 |
| B1 Bore | 359.5 | 14.15 |
| K Bolt circle diameter | 460 | 18.11 |
| L Bolt holes, 16 off | 22 | 0.87 |

16 bolts M20; holes 22 mm (0.87 in)

RAJENDRA INDUSTRIAL CORPORATION
rajendradatacenter.com
Drawing RIC-EN1092-01-PN10-DN350-A
Scale 1:6 on A4
Units: mm (inches)
Date 2026-11-22
Quote: rajendradatacenter.com/rfq/
sales@rajendradatacenter.com
+91 74338 71355