**Approx. weight**

| Material | kg | lb |
|---|---|---|
| Carbon steel | 9.3 | 20.4 |
| Stainless steel 304 and 304L | 9.3 | 20.6 |
| Stainless steel 316 and 316L | 9.4 | 20.8 |

Densities 7.85, 7.9 and 8.0 g/cm3.
Calculated from the dimensions as the standard gives them, with no allowance for tolerance.

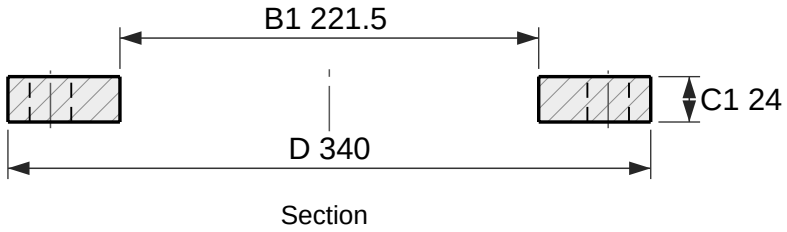

Section

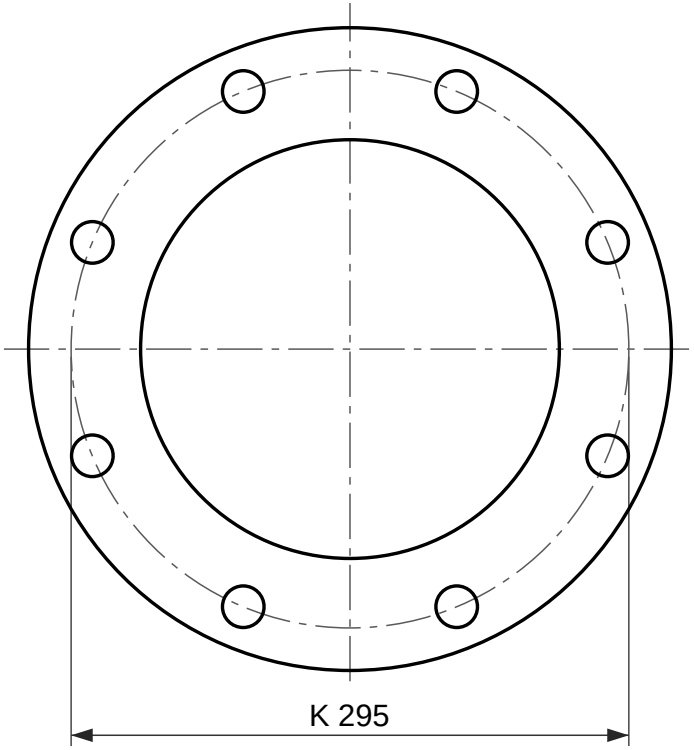

8 holes Ø22

Face view

# Plate flange, EN 1092-1 type 01, PN 10

DN 200, facing type A (flat face)

Designation: Flange EN 1092-1/01/A/DN 200/PN 10
Dimensions per EN 1092-1:2018, Table 12 (PN 10) and Table 8 (facing); tolerances per EN 1092-1.
Facing type A (flat face), as 5.7.2.3 gives this type unless the order says otherwise.
Reference drawing. The purchase order and EN 1092-1 govern.
Generated at rajendradatacenter.com/flanges/en-1092-1/

| Dimension | mm | in |
|---|---|---|
| D Outside diameter | 340 | 13.39 |
| C1 Flange thickness | 24 | 0.94 |
| B1 Bore | 221.5 | 8.72 |
| K Bolt circle diameter | 295 | 11.61 |
| L Bolt holes, 8 off | 22 | 0.87 |

8 bolts M20; holes 22 mm (0.87 in)

RAJENDRA INDUSTRIAL CORPORATION
rajendradatacenter.com
Drawing RIC-EN1092-01-PN10-DN200-A
Scale 1:4 on A4
Units: mm (inches)
Date 2026-11-22
Quote: rajendradatacenter.com/rfq/
sales@rajendradatacenter.com
+91 74338 71355